MKCells®

Finest High Tech Load Cell

# Wireless Crane Scale

## Model: MK-E85

| | |
|---|---|
| Accuracy Standard | According to OIML Class III |
| Display | LCD with backlight |
| Wireless Distance | Up to 200m without obstacle |
| Filtering | Low, medium or high selectable |
| Resolution | 2000 to 3000 divisions standard<br>up to 15,000 available |
| Zero Range | Auto/Manual setting, from 4% to 100%F.S. |
| Tare Range | 100% F.S. |
| Overload Indication | 100% F.S. 9e |
| Max. Safety Load | 125% F.S. |
| Max. Ultimate Load | 150% F.S. |
| Scale Battery Type | 3,7V/12Ah Rechargeable Lithium-ion Battery |
| Indicator Battery | DC 6V/4,5Ah Rechargeable Lead-Acid battery |
| Battery Charger for Indicator | Input: AC100-240V 50/60Hz Output: 850mA |
| Operating Temperature Range | -20°C ~ +50°C |
| Operating Humidity | ≤85% RH under 20°C |
| Radio Frequency | 433MHz |

**Features:**

- Seamless steel pipe enclosure for maximum protection
- Menu operation mode, calibration, saving, searching, peak hold, easy to operate
- Indicator adopts Σ - Δ A/D conversion technology
- Weighing data save protection in case of power off
- Battery charger with several protection modes to extend life of rechargeable battery
- Standard RS232 communication interface (optional)
- Portable design, indicator packed in portable carry case, easy to operator outdoor
- Gathering up to data records of 99 weghings, records can be sorted, searched
- Power saving mode, indicator will turn off automatically after 30 minutes with no operation
- With 32 channels optional, so 32 crane scales can operated independently in the same airplace without interface
- Crane scale battery can be use up to ±300 hours non-stop

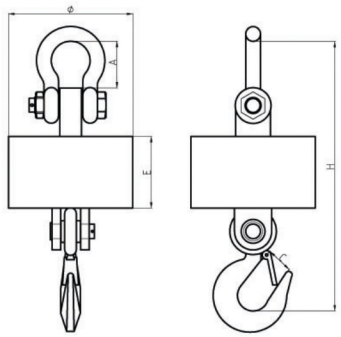


**Dimensions and Specifications**

| Model | Cap. (kg) | Resolution (kg) | A (mm) | C (mm) | E (mm) | H(mm) | Ø(mm) | G.W.(kg) |
|---|---|---|---|---|---|---|---|---|
| MK-E85-1 | 1000 | 0.5 | 95 | 33 | 145 | 445 | 270 | 30 |
| MK-E85-2 | 2000 | 1 | 95 | 33 | 145 | 445 | 270 | 30 |
| MK-E85-3 | 3000 | 1 | 95 | 40 | 145 | 445 | 270 | 31 |
| MK-E85-5 | 5000 | 2 | 120 | 50 | 155 | 485 | 298 | 42 |
| MK-E85-10 | 10000 | 5 | 124 | 60 | 170 | 655 | 325 | 52 |
| MK-E85-15 | 15000 | 5 | 225 | 70 | 170 | 855 | 325 | 72 |
| MK-E85-20 | 20000 | 10 | 225 | 85 | 170 | 920 | 325 | 82 |
| MK-E85-30 | 30000 | 10 | 260 | 105 | 200 | 1055 | 375 | 122 |